PREMIUM 2-BOWL 2-DRAINBOARD SINK

SINKS - 2 BOWLS

MATERIALS

- 16 Gauge 300 Series Stainless Steel; Fabricated
- Stainless Steel Legs, Gussets, Cross-Bracing, and Bullet Feet

COMPATIBLE WITH *NEW* NBR FAUCETS!

SEE PAGE 75

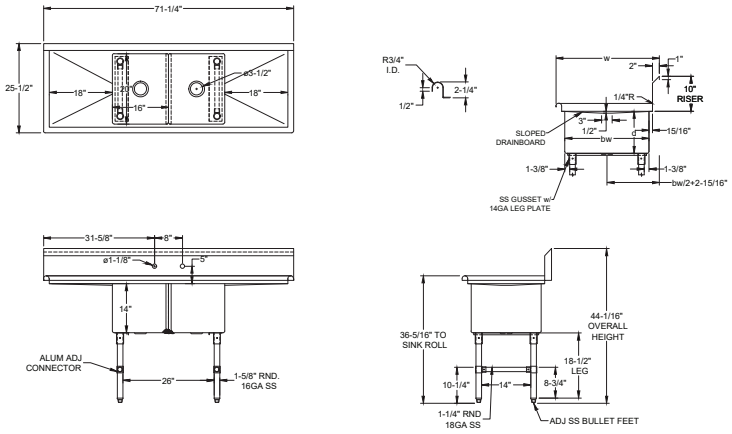

FEATURES

- 10"H Backsplash with 2" Return to Wall
- 8" On-Center Wall-Mounted Faucet Holes
- 3-½" Die-Stamped Drain Opening With Drain Baskets Included
- Two Drainboards (1 on Each Side)
- Cross-Bracing for Reinforced Support
- Adjustable Bullet Feet

MODEL NUMBER	BOWL SIZE L X W X H	LENGTH	WIDTH	DRAINBOARD SIZE
2SS-162014LR18	16" x 20" x 14"	71-¼"	25-½"	18"
2SS-181814LR18	18" x 18" x 14"	75-¼"	23-½"	18"
2SS-182414LR18	18" x 24" x 14"	75-¼"	29-½"	18"
2SS-242414LR24	24" x 24" x 14"	99-¼"	29-½"	24"

(609) 642 - 8389 | SALES@NBREQUIPMENT.COM | WWW.NBREQUIPMENT.COM
NBR EQUIPMENT, 10 ABEEL ROAD, CRANBURY, NJ 08512