BLENDER STATION WITH DUMP SINK

UNDERBAR - BLENDER STATIONS

MATERIALS

- 18 Gauge 300 Series Stainless Steel; Fabricated
- Stainless Steel Legs and Cross-Bracing
- Plastic Adjustable Bullet Feet

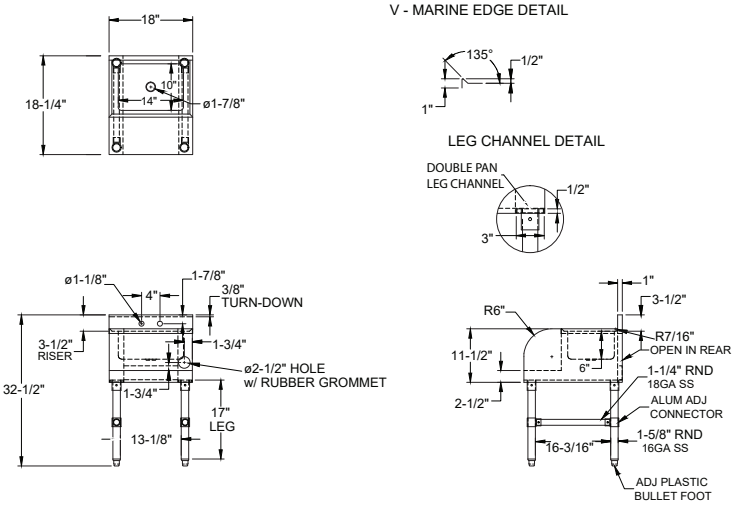

FEATURES

- 4" On-Center Wall-Mounted Faucet Holes
- 1-½" Drain Hole With Rubber Grommet For Power Cord

MODEL NUMBER	BOWL SIZE L X W X H	LENGTH	WIDTH
UW-1-1410-1818-H	14" x 10" x 6"	18"	18-¼"
UW-1-1410-1821-H	14" x 10" x 6"	18"	21-¼"

(609) 642 - 8389 | SALES@NBREQUIPMENT.COM | WWW.NBREQUIPMENT.COM
NBR EQUIPMENT, 10 ABEEL ROAD, CRANBURY, NJ 08512