PART NUMBER	"A"	"B"
58221B1	12"	11.87"
58221B2	18"	17.87"
58221B3	24"	23.87"
58221B4	30"	29.87"
58221B5	36"	35.87"
58221B6	42"	41.87"
58221B7	48"	47.87"
58221B8	54"	53.87"
58221B9	60"	59.87"

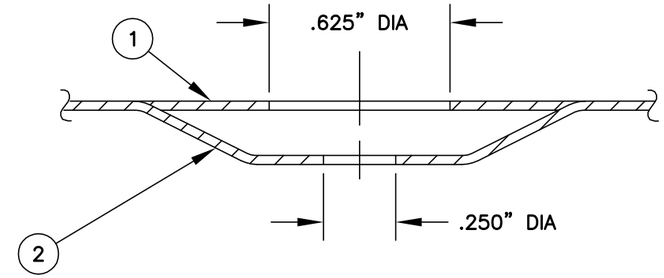

SECTION "B"–"B"
SCALE = 2X

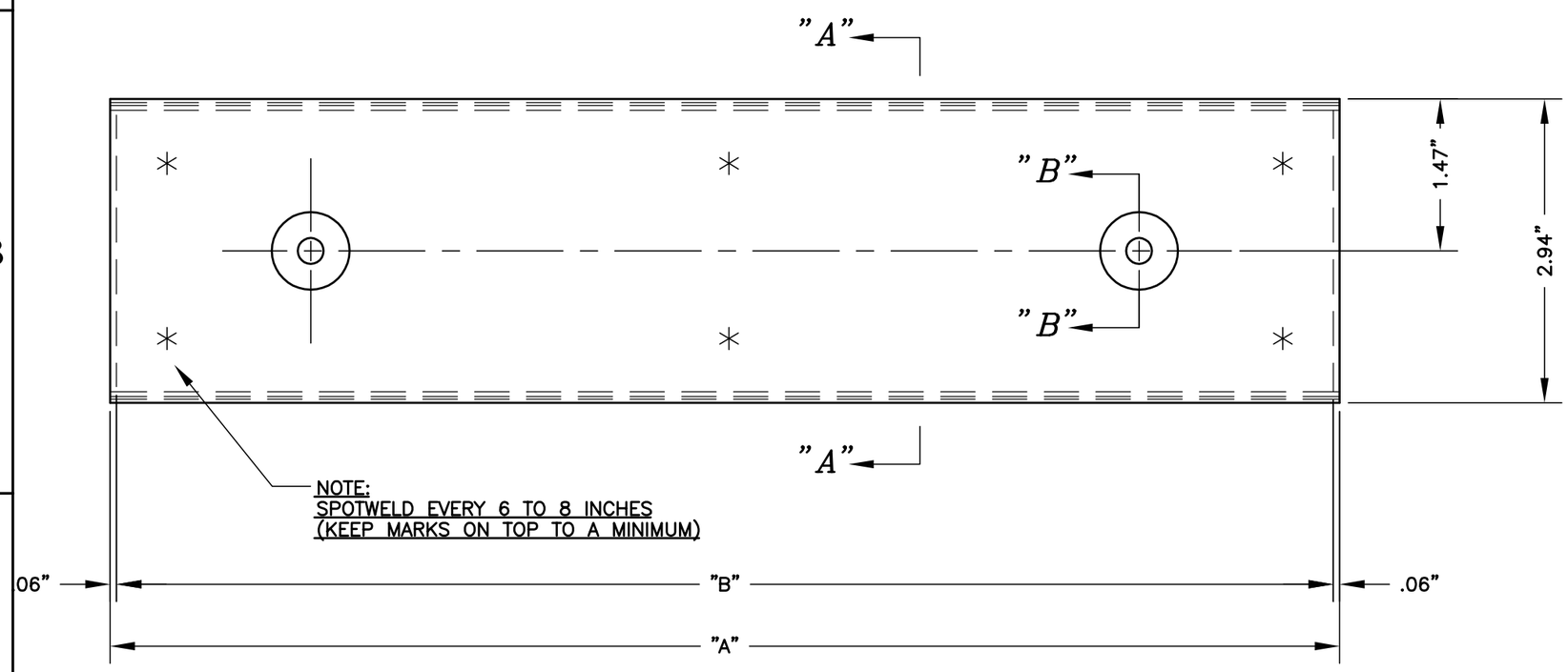

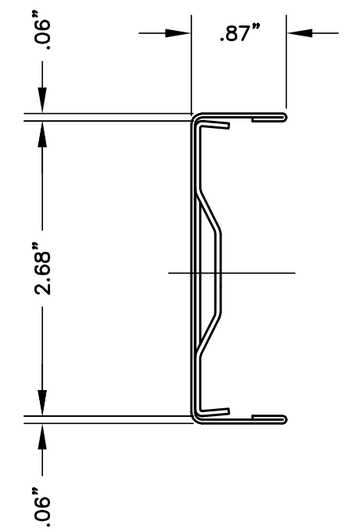

SECTION "A"–"A"

SEE SHEET 2 FOR BILL OF MATERIALS

REF. 58221

TOLERANCES UNLESS OTHERWISE SPECIFIED — DIMENSIONS ARE IN INCHES

FRACTIONS: ±1/64" 2 PLACE DECIMALS: ±.03" 3 PLACE DECIMALS: ±.015" ANGLES: ±1 1/2°

PERLICK CORPORATION MILWAUKEE, WI.

ISLAND DECK SPOTWELD ASSEMBLY

REVISIONS

SCALE NONE
DR. MH DATE 10–23–00
CHK'D DATE
APP'D DATE

ORDER NO.
PRINTED

58221B
SHEET 1 OF 2

THIS DOCUMENT/PUBLICATION/SOFTWARE/DRAWING CONTAINS PROPRIETARY INFORMATION WHICH IS THE PROPERTY OF THE PERLICK CORP. IT MAY NOT BE REPRODUCED OR TRANSMITTED IN ANY FORM, ELECTRONIC OR MECHANICAL, INCLUDING PHOTOCOPYING, RECORDING, OR USED IN ANY INFORMATION STORAGE, TRANSMISSION, OR RETRIEVAL SYSTEM, WITHOUT WRITTEN PERMISSION FROM PERLICK CORP. COPYRIGHT 2000 PERLICK CORPORATION. ALL RIGHTS RESERVED.