PREMIUM 2-BOWL SINK

SINKS - 2 BOWLS

MATERIALS

- 16 Gauge 300 Series Stainless Steel; Fabricated
- Stainless Steel Legs, Gussets, Cross-Bracing, and Bullet Feet

COMPATIBLE WITH *NEW* NBR FAUCETS!

SEE PAGE 75

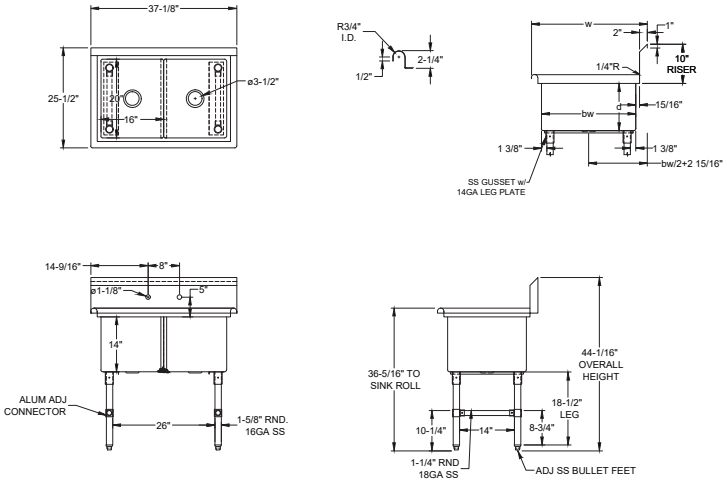

FEATURES

- 10"H Backsplash with 2" Return to Wall
- 8" On-Center Wall-Mounted Faucet Holes
- 3-½" Die-Stamped Drain Opening With Drain Baskets Included
- Cross-Bracing for Reinforced Support
- Adjustable Bullet Feet

MODEL NUMBER	BOWL SIZE L X W X H	LENGTH	WIDTH
2SS-162014	16" x 20" x 14"	37-⅛"	25-½"
2SS-181814	18" x 18" x 14"	41-⅛"	23-½"
2SS-182414	18" x 24" x 14"	41-⅛"	29-½"
2SS-242414	24" x 24" x 14"	53-⅛"	29-½"