REVISED May/2020

IM-1100-WC/WH

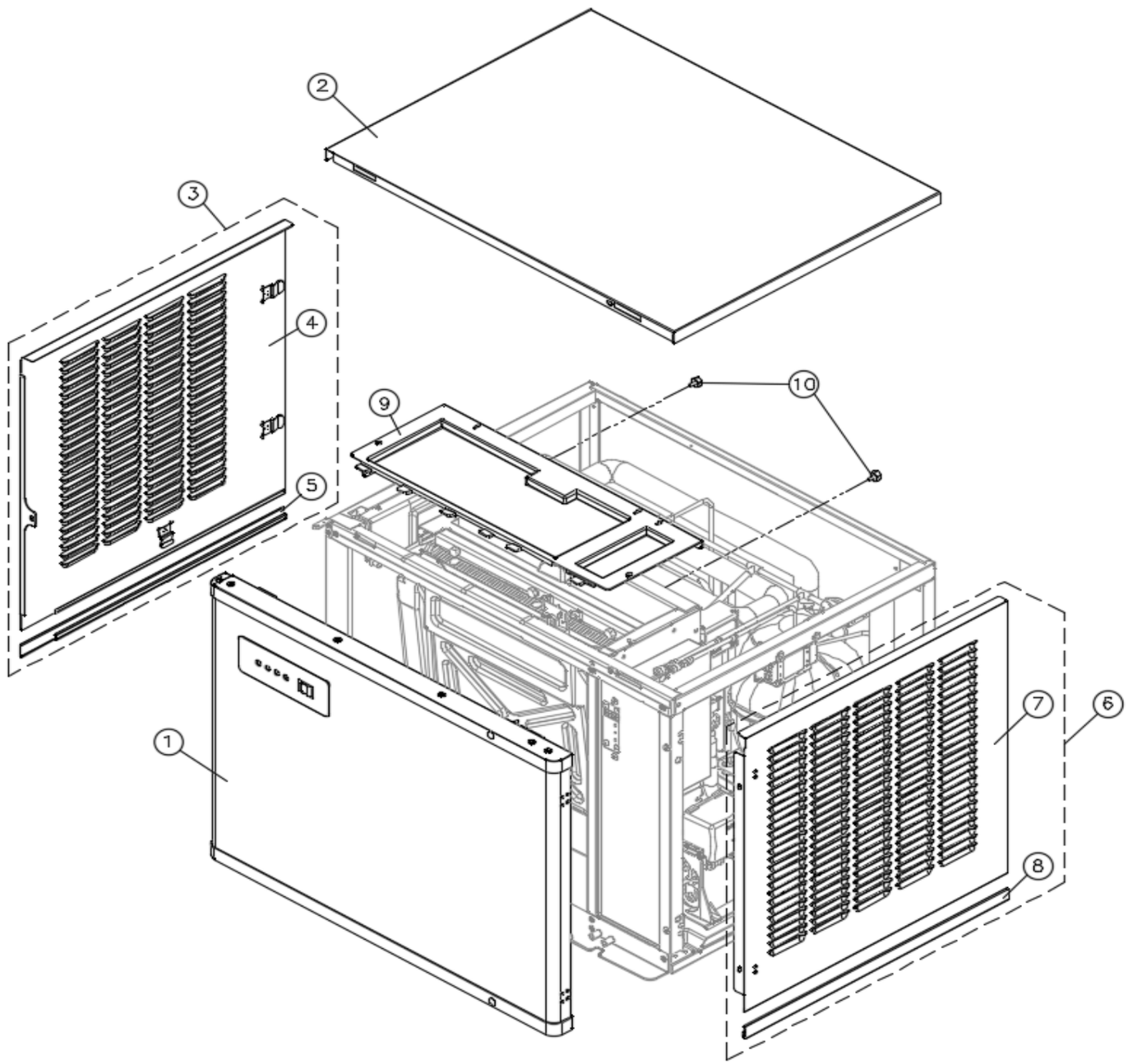

NO	ITEMS	CODE	Q'TY
1	FRONT PANEL	422002730	1
2	TOP COVER	317194410	1
3	LEFT SIDE PANEL	420049300	1
4	LEFT SIDE W-PANEL	349098900	1
5	SIDE PANEL B-ENDCAP(L)	348010200	1
6	RIGHT SIDE PANEL	420049410	1
7	RIGHT SIDE W-PANEL	349099110	1
8	SIDE PANEL B-ENDCAP(R)	348010300	1
9	EVAP TOP COVER, PLASTIC	427059100	1
10	THUMB SCREW	210804501	2

REVISED May/2020

IM-1100-WC/WH

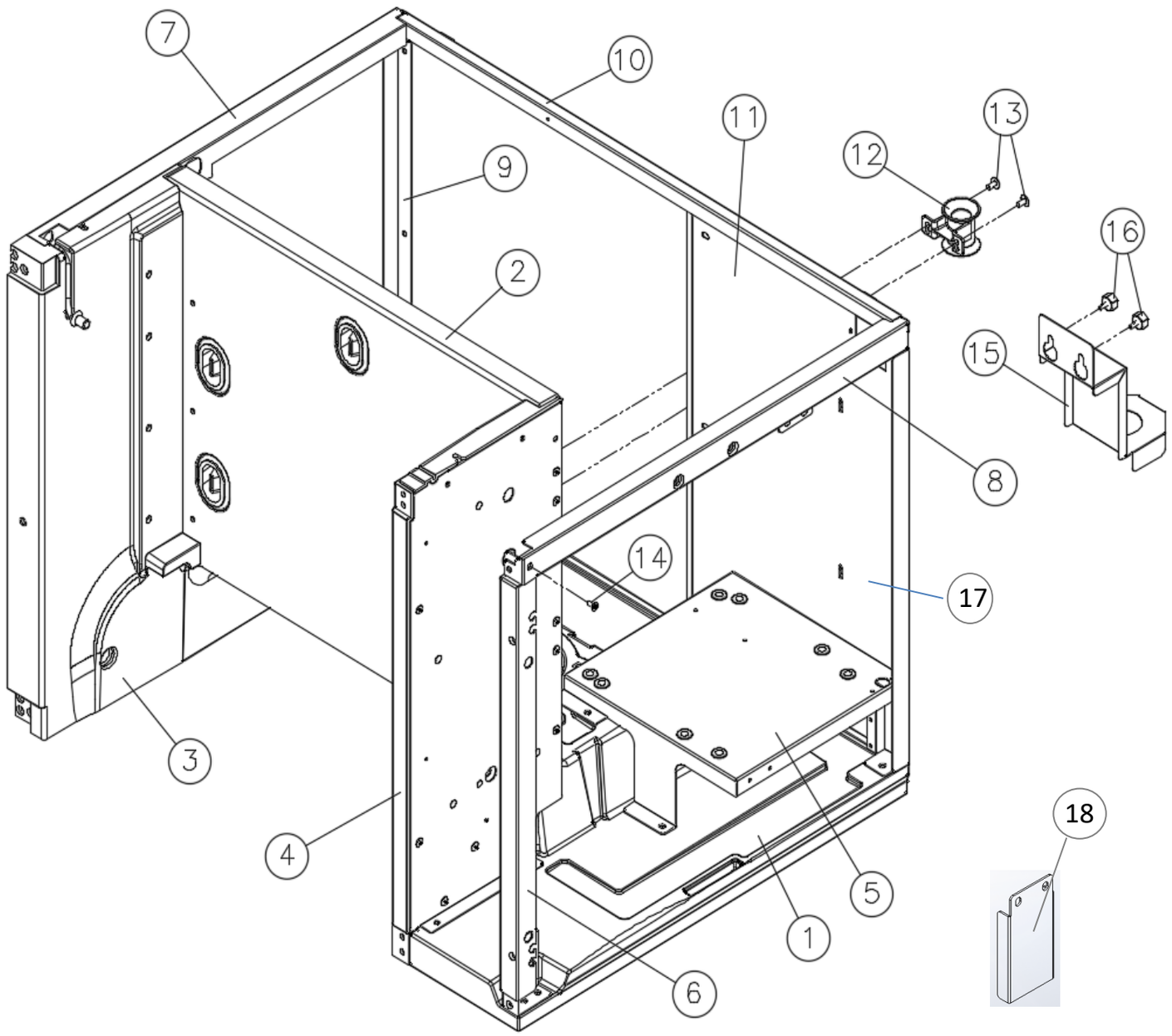

NO	ITEMS	CODE	Q'TY
1	BASE PLATE INSULAION	483022200	1
2	EVAPORATOR BACK PANEL	422002500	1
3	EVAPORATOR SIDE PANEL (L)	420049700	1
4	EVAPORATOR SIDE PANEL (R)	420049800	1
5	SUPPORT, COMPRESSOR	320593620	1
6	FRONT SIDE FRAME (R)	348020600	1
7	SIDE TOP FRAME (L)	348010700	1
8	SIDE TOP FRAME (R)	348011800	1
9	SIDE REAR FRAME(L)	348011300	1
10	REAR TOP FRAME	348010900	1
11	BACK PANEL	349099710	1
12	WATER LEVEL PROBE HOLDER	339014100	1
13	SELF-TAPING SCREW	MTCX0816R	2
14	MACHINE SCREW	MFCX0820R	1
15	WATER PUMP HOLDER	301181000	1
16	THUMB SCREW	210804501	2
17	SIDE REAR FRAME	348011400	1
18	COMPRESSOR BRACKET	320593800	1

REVISED May/2020

IM-1100-WC/WH

[FRONT PANEL PARTS]

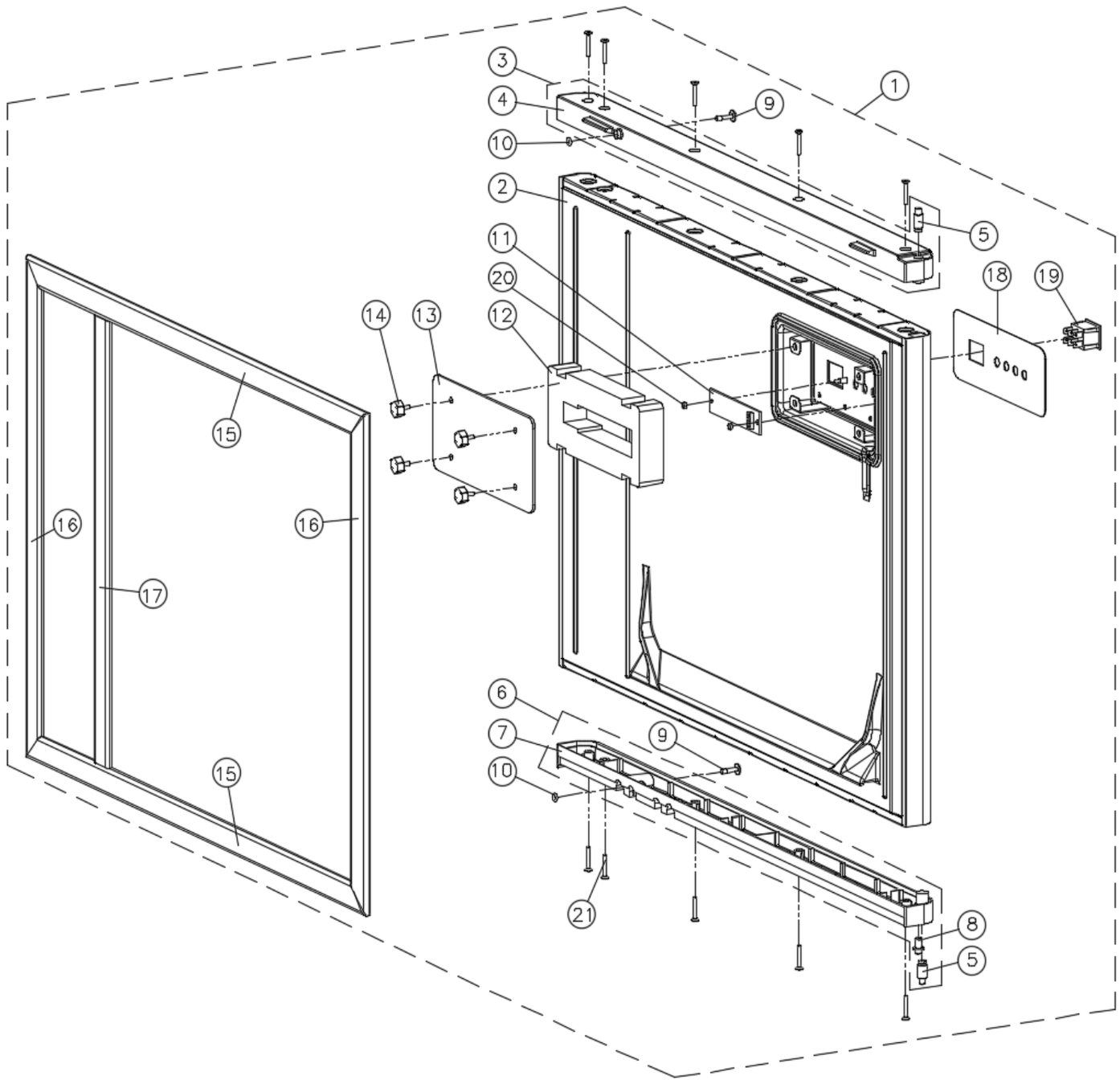

NO	ITEMS	CODE	Q'TY
1	FRONT PANEL COMPLETE ASSY	422002730	1
2	FRONT PANEL FOAM ASSY	422002810	1
3	FRONT TOP CAP COMPLETE ASSY	432034910	1
4	FRONT TOP CAP	341012602	1
5	TOP PIN ASSY	314029900	2
6	FRONT BOTTOM CAP COMPLETE	432035010	1
7	FRONT BOTTOM CAP	341012702	1
8	SHAFT HINGE	321005000	1
9	FRONT COVER SCREW	210818600	2
10	O-RING, SCREW RETAINER	303036600	2
11	DISPLAY PCB	367013000	1
12	INSULATION, DISPLAY	306041901	1
13	COVER, DISPLAY REAR	317197500	1
14	THUMB SCREW	210804501	4
15	FRONT PANEL GASKET(TOP/BOTTOM)	656004500	4
16	FRONT PANEL GASKET (L/R)	656004500	
17	FRONT PANEL GASKET (DIVIDER)	656004610	1
18	FRONT DISPLAY LABEL	440033800	1
19	ON/OFF/ICE SWITCH	355024500	1
20	NUT HEX	215000600	2
21	MACHINE SCREW	MFCX0832R	10

REVISED 09/18/2020

IM-1100-WC/WH

[CONTROL BOX]

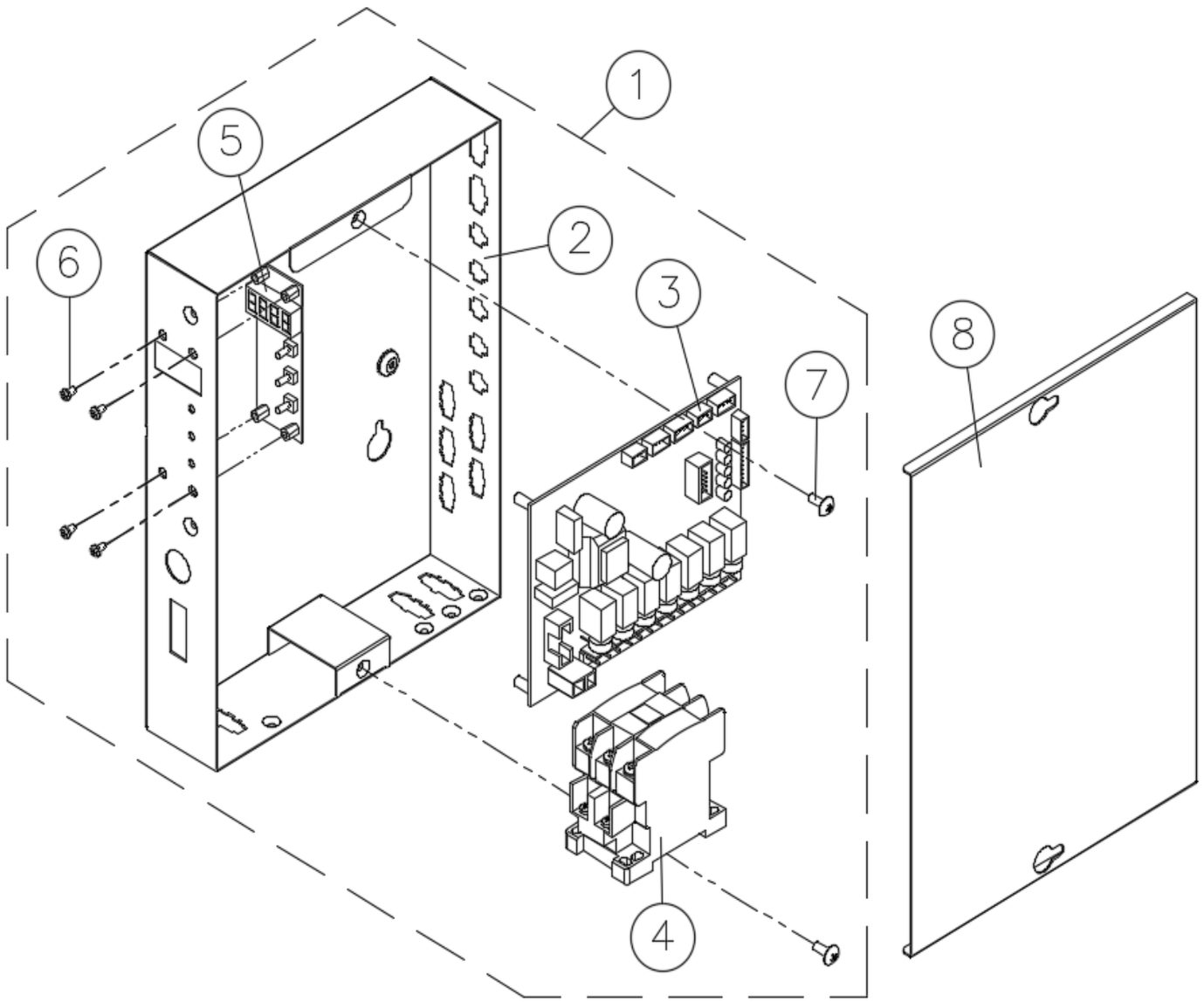

NO	ITEMS	CODE	Q'TY
1	CONTROL BOX COMPLETE ASSY	426069001	1
2	CONTROL BOX	374143900	1
3	MAIN CIRCUIT BOARD	367013400	1
3-1	MAIN & FND PCB KIT_F90SEC (V1.2)	367013400F90	1
4	MAGNETIC CONTACTOR	322002300	1
5	FND CIRCUIT BOARD	367013100	1
6	MACHINE SCREW	MPCX0610L	4
7	MACHINE SCREW	MTCX0812R	1
8	CONTROL BOX COVER	374144300	1

REVISED May/2020

IM-1100-WC/WH

[WATER IN/OUT PARTS]

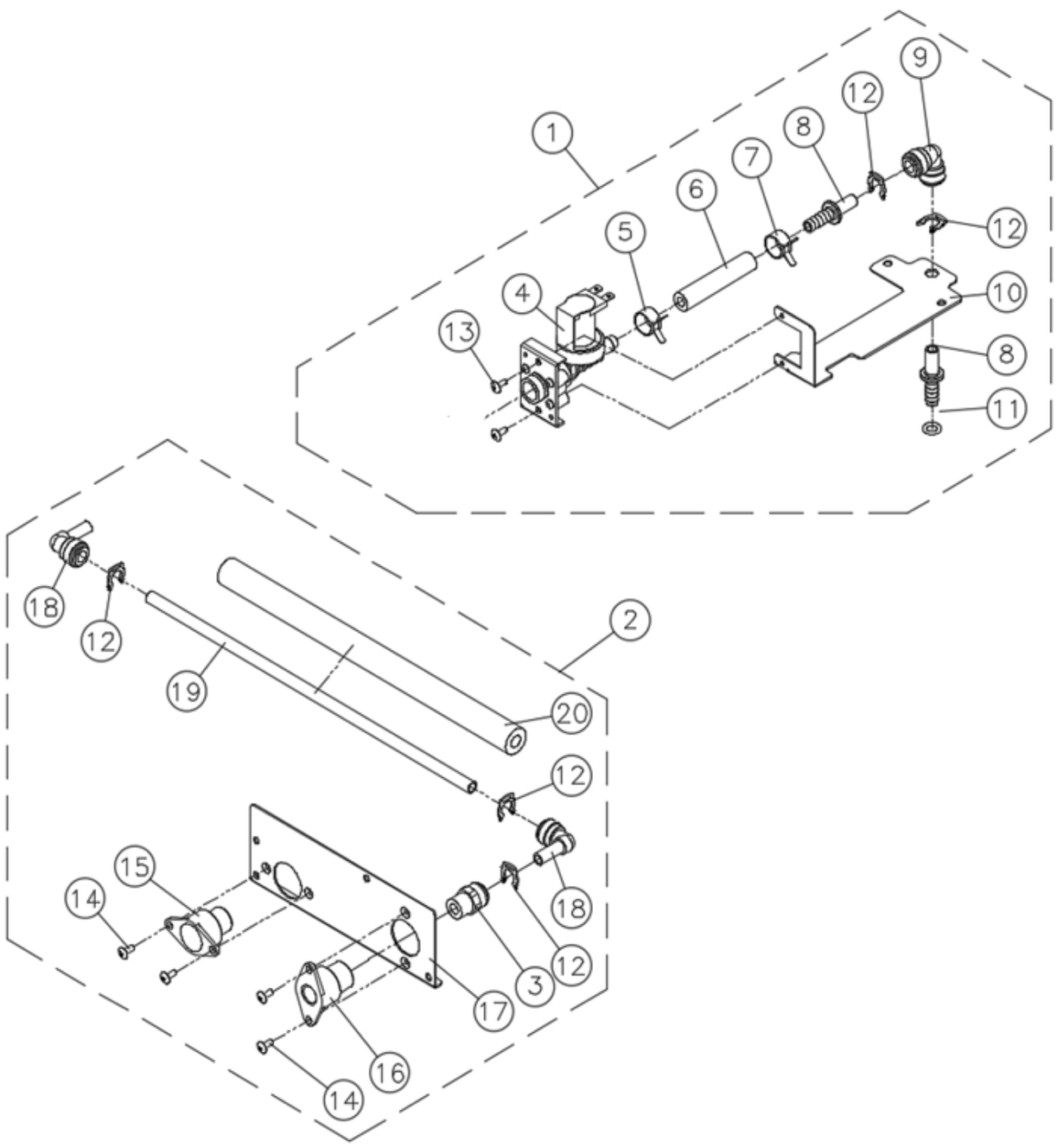

NO	ITEMS	CODE	Q'TY
1	WATER INLET VALVE ASSY	469003010	1
2	WATER INLET HOSE ASSY	469002810	1
3	STRAIGHT ADAPTOR JG	N/A	
4	WATER INLET VALVE	340027520	1
5	BAND SPRING 17	N/A	
6	BRAIDED SILICONE HOSE	N/A	
7	BAND SPRING 17	N/A	
8	TUBE TO HOSE STEM	N/A	
9	EQUAL ELBOW	N/A	
10	SUPPORT WATER INLET VALVE	N/A	
11	O-RING(AN110)	N/A	
12	LOCKING CLIP 3/8"	N/A	
13	MACHINE SCREW (M4x8)	N/A	
14	MACHINE SCREW (M4x8)	N/A	
15	DRAIN SOCKET (NPT 3/4" - ø20)	N/A	
16	WATER INLET SOCKET (3/8" NPT)	N/A	
17	WATER IN-OUT BRACKET	N/A	
18	STEM ELBOW	N/A	
19	PE TUBE (OD 3/8")	N/A	
20	PIPE INSULATION (ID 10, t5)	N/A	

REVISED May/2020

IM-1100-WC/WH

[EVAPORATOR PARTS]

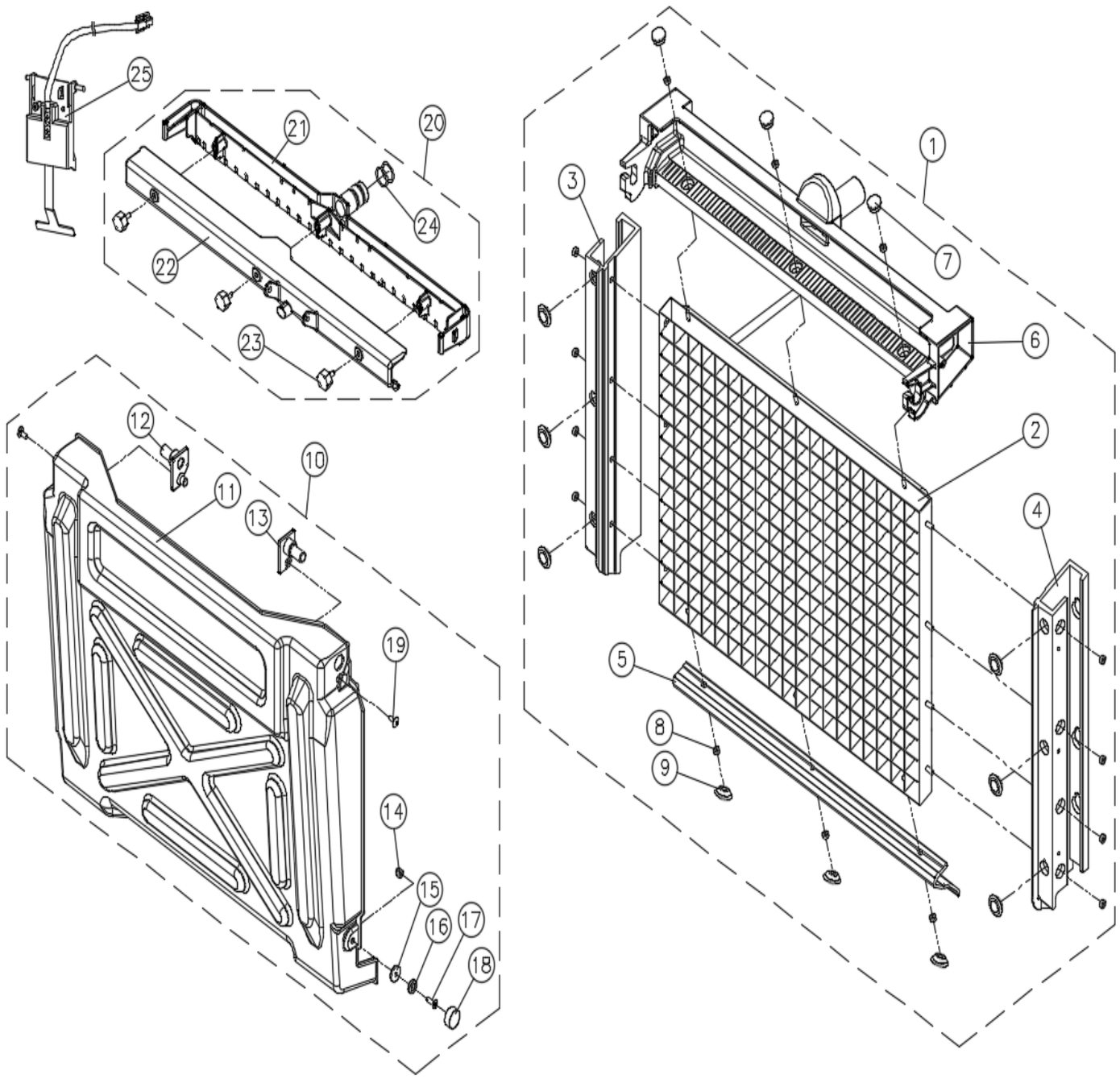

NO	ITEMS	CODE	Q'TY
1	EVAPORATOR COMPLETE ASSY-C	409041300	1
	EVAPORATOR COMPLETE ASSY-H	409041310	1
2	EVAPORATOR	N/A	1
3	EVAPORATOR FRAME-L	N/A	1
4	EVAPORATOR FRAME-R	N/A	1
5	EVAPORATOR BOTTOM FRAME	N/A	1
6	EVAPORATOR TOP FRAME	N/A	1
7	EVAPORATOR TOP FRAME-CAP	N/A	3
8	NUT HEX	N/A	14
9	CAP SILICON	N/A	11
10	WATER CURTAIN ASSY	482002800	1
11	WATER CURTAIN	N/A	1
12	HANGER-L	N/A	1
13	HANGER-R	N/A	1
14	CAP NUT	N/A	1
15	SPACE-MAGNET	N/A	1
16	MAGNET(Φ12xT3)	N/A	1
17	MACHINE SCREW	N/A	1
18	CAP MAGNET	N/A	1
19	TAPPING SCREW	N/A	2
20	WATER DISTRIBUTOR ASSY	466004000	1
21	WATER DISTRIBUTOR-BODY	N/A	
22	WATER DISTRIBUTOR-COVER	N/A	
23	THUMB SCREW	210804501	3
24	O-RING	303036300	2
25	ICE THICKNESS PROBE ASSY	701003100	1

REVISED May/2020

IM-1100-WC/WH

[WATER TROUGH PARTS]

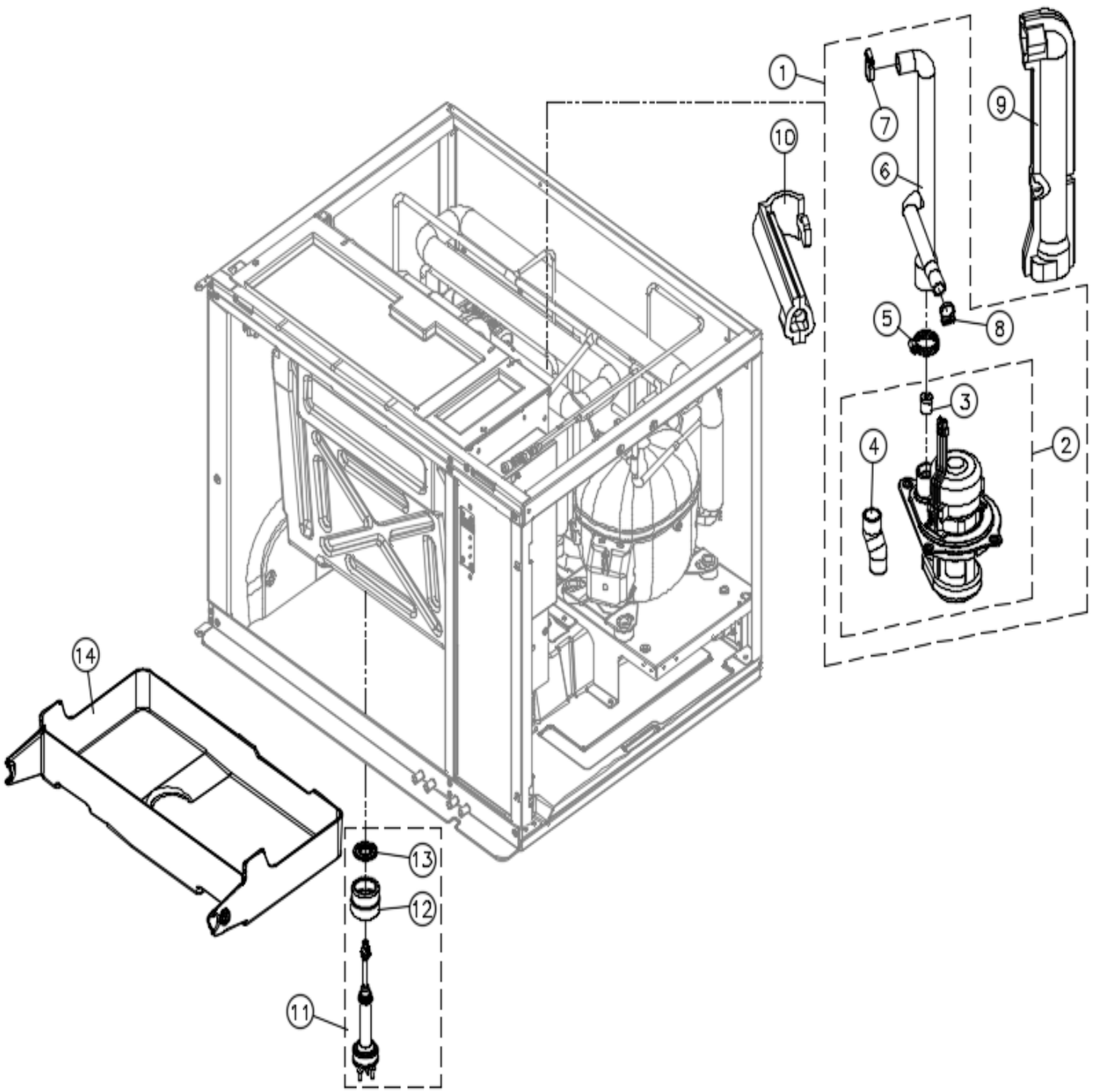

NO	ITEMS	CODE	Q'TY
1	WATER PUMP COMPLETE ASSY	#2~8	1
2	PUMP MOTOR	406025010	1
3	PACKING ORIFFICE (Φ9)	N/A	
4	CONNECTING HOSE	N/A	
5	BAND HOSE 40	203001400	1
6	PVC PIPE	229032800	1
7	CLAMP, HOSE	229026600	1
8	BAND SPRING 21	203003300	1
9	INSULATION PUMP TO DISTRIBUTOR	306042500	-
10	INSULATION PUMP TO DRAIN	306042100	1
11	WATER LEVEL PROBE COMPLETE ASSY	701003210	1
12	WATER LEVEL RUBBER-CAP	303036000	1
13	W. LEVLE RUBBER-HOLDER	303036100	1
14	WATER TROUGH	339013400	1

REVISED May/2020

IM-1100-WC/WH

[FRAME PARTS]

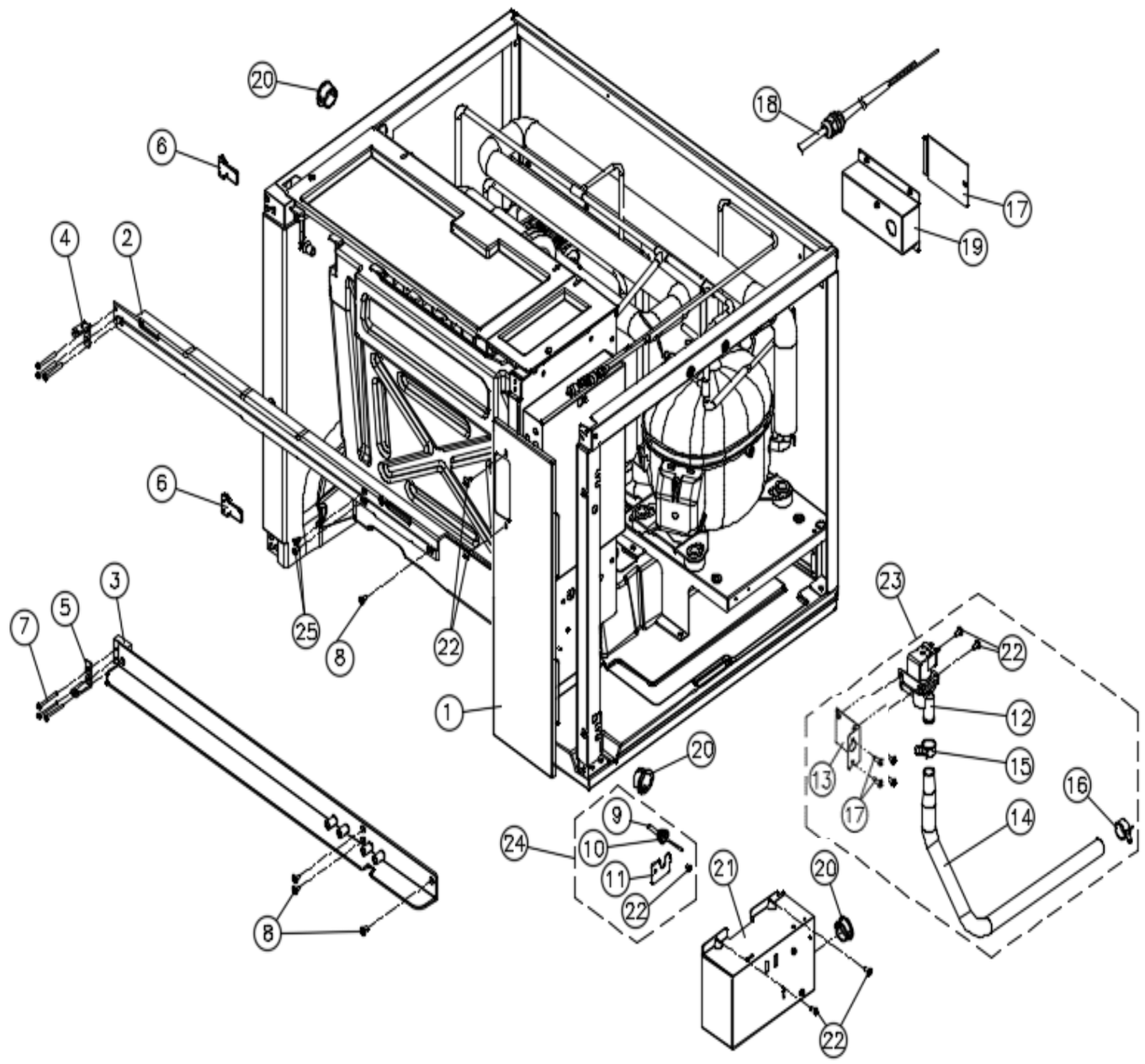

NO	ITEMS	CODE	Q'TY
1	FRONT COVER	317204600	1
2	FRONT TOP SUPPORT	341012401	1
3	FRONT LOWER SUPPORT	341012501	1
4	HINGE BRACKET	321005110	1
5	HINGE BRACKET DOWN	321005210	1
6	HINGE SUPPORT	341012300	2
7	TAPPING SCREW	TFCQ0841R	6
8	MACHINE SCREW	MFCX1022R	4
9	CURTAIN SENSOR	701002000	1
10	SENSOR CAP	319009300	1
11	COVER BRACKET	301169400	1
12	DUMP VALVE	340025800	1
13	BRACKET, DUMP VALVE	301169600	1
14	PVC PIPE	229032100	1
15	BAND SPRING 20	203004200	1
16	BAND SPRING 21	203003300	1
17	JUCTION BOX COVER	317197900	1
18	POWER CORD	722014100	1
19	JUCTION BOX	374143800	1
20	GROMMET BUSHING	232003500	2
21	CAPACITOR BOX (BOX ONLY)	374144001	1
22	MACHINE SCREW	MTCX0816R	5
23	DRAIN VALVE COMPLETE ASSY	#12~16,20,22	1
24	SENSOR PARTS COMPLETE	701003300	1
25	MACHINE SCREW	MFCX1025R	2

REVISED 09/18/2020

IM-1100-WC/WH

[REFRIGERATION PARTS]

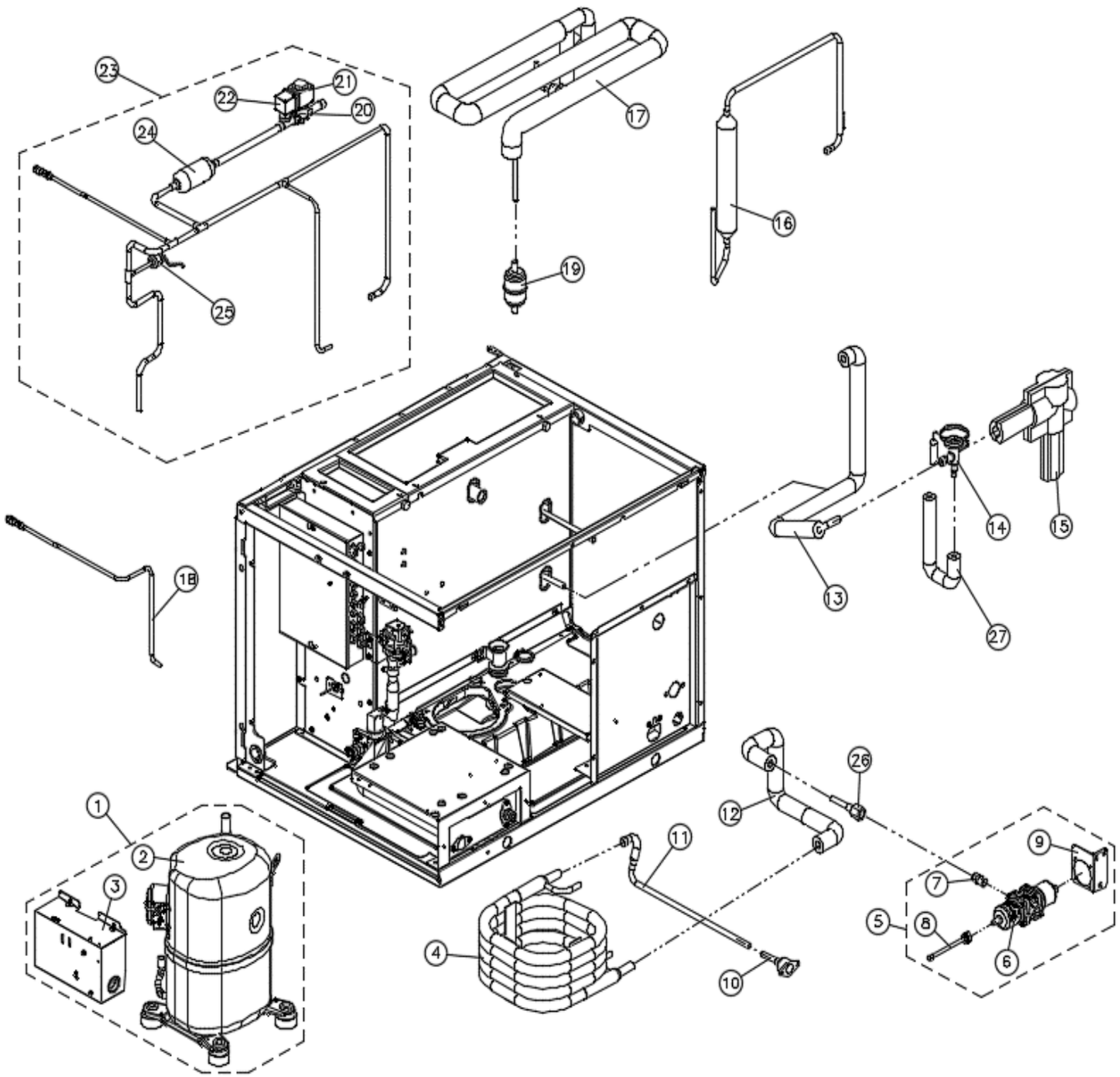

NO	ITEMS	CODE	Q'TY
1	COMPRESSOR ASSY	N/A	N/A
2	COMPRESSOR	394022900	1
3	STARTER KIT	426070710	1
4	CONDENSER	411027600	1
5	WATER ADJUST VALVE ASSY	#6~9	1
6	WATER ADJUST VALVE	340031200	1
7	WATER FLARE BOLT	214010600	1
8	SOLDER ADAPTOR	215018500	1
9	BRACKET	301187700	1
10	SOCKET (3/4",NPT)	215015510	1
11	CONDENSER PIPE_OUT	325140230	1
12	CONDENSER PIPE_IN	325140320	1
13	HOT GAS PIPE ASSY	325145600	1
14	EXPANSION VALVE	340009300	1
15	FOAM INDULATION, TXV	306016700	1
16	LIQUID RECEIVER PIPE & DRYER	325145500	1
17	HEAT EXCHANGE PIPE	325145710	1
18	CHARGE SCHRAEDER VALVE	325151001	1
19	FILTER DRYER	372001300	1
20	SOLENOID VALVE	340015500	1
21	SOLENOID VALVE COIL	340026300	1
22	SOLENOID VALVE PLUG	340027300	1
23	DISCHARGE PIPE ASSY	325146300	1
24	STRAINER HOT GAS	605001800	1
25	ASSY HIGH PRESSURE CUT OUT	429003900	1
26	FLARE SLEEVE ASSY	407024800	1
27	EXPANSION VALVE INLET PIPE	325146400	1