170 Millennium Blvd, Moncton, NB E1E 2G8
Tel: 1-800-565-2253 • 506-858-8990
Fax: 506-859-6929

If any of doors are open before the unit is shut off, the knife will stop immediately and will be out of position. To be able restart the dough divider, the knife will need to be reset.

The following is how to reset both the BMDD003 and BMDD005, both M44 and newer M48

BMDD005 (M44)

Remove the back panel, engage the switch with operates the knife motor and this will allow the knife to go back into the proper position.

BMDD005 New Unit from 2017 (M48)

You need to push in the button 666 from the diagram below (while the green light is on), then you will need to turn the lower lever 638 towards the last hole on the left and the knife 691 will automatically go back to its original position.
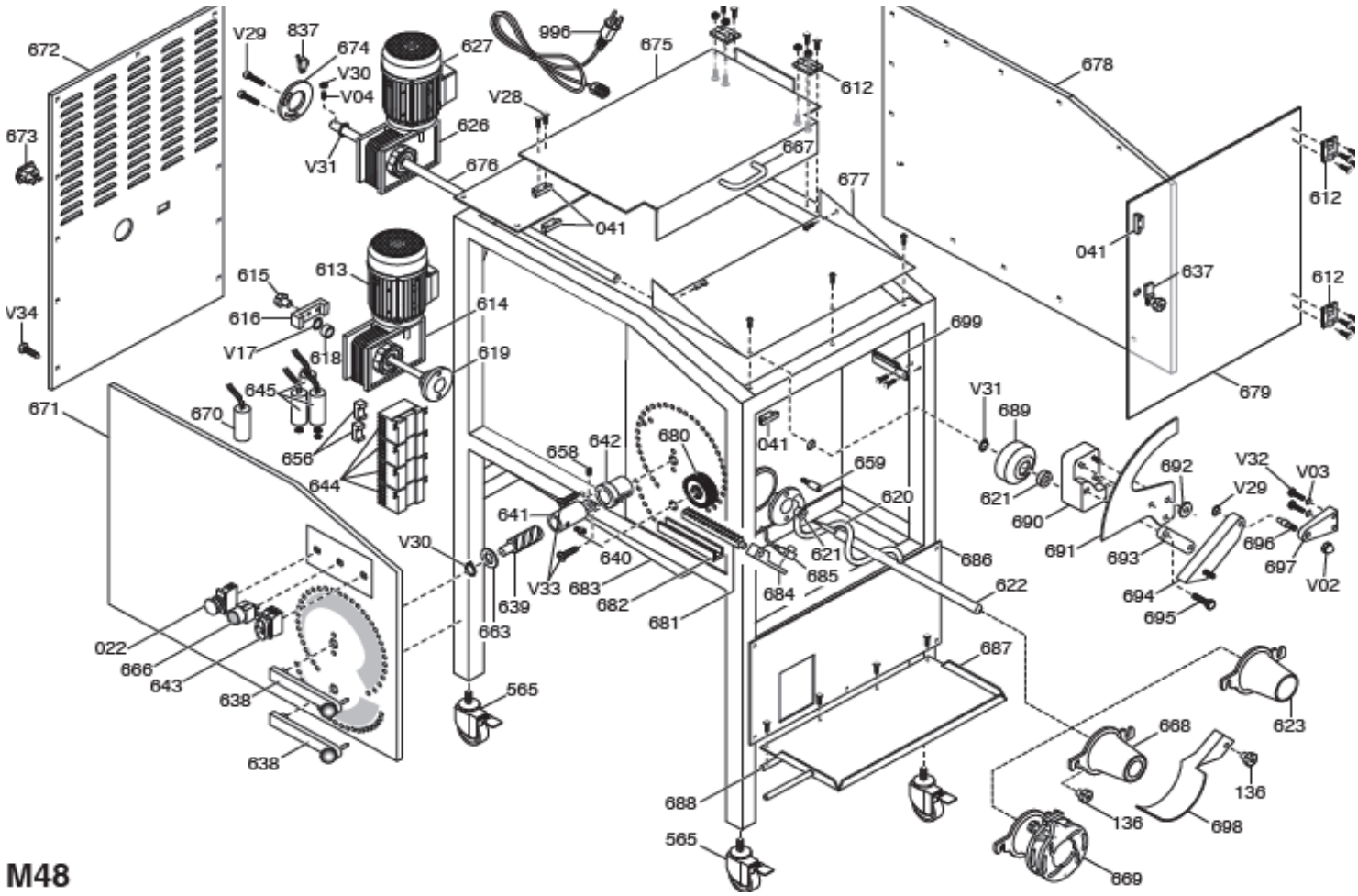
Once the knife is returned to the original position, do not leave the lower lever 638 completely on the left side hole, otherwise the knife will just continue to turn.