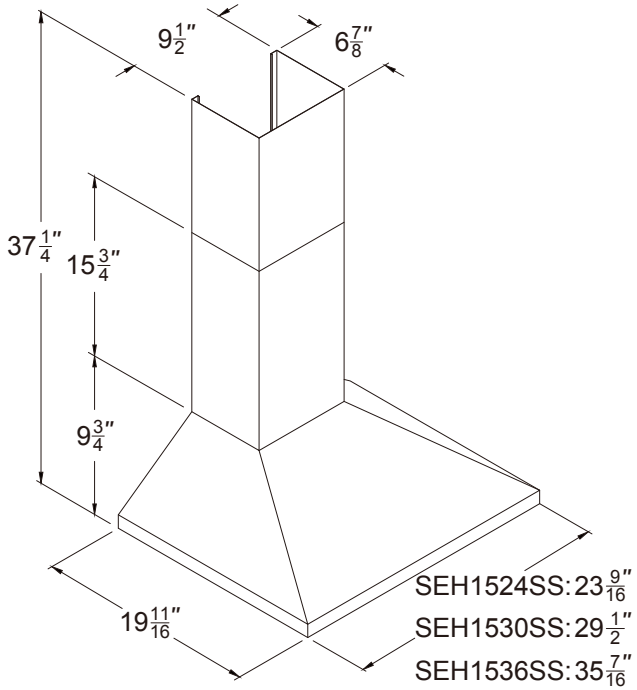DIMENSIONAL DIAGRAM