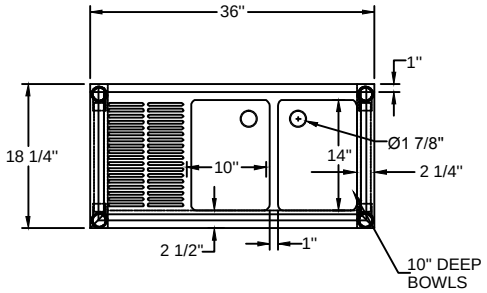

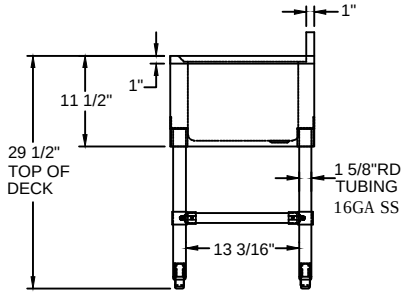

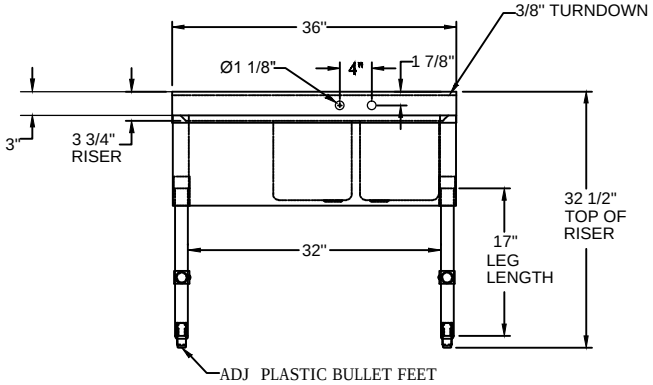

Model #		NBR Equipment	10 Abeel Road, Cranbury, NJ 08512 Tel: 1-609-642-8389 Fax: 1-609-642-8099 E-mail: sales@nbrequipment.com Website: www.nbrequipment.com
UW-2-101410-36L		Material: T304 18GA	
Date:	6/28/2018		