Empura®

EKSP29M

Salad / Sandwich Mega Top Prep Table

Features

- CFC free refrigerant and foam insulation
- Electronic thermostat and digital LED temperature display for accurate control and easy reading
- Easy to mount 2.5" casters (lockable in front) are standard with all units
- Self-closing doors that remain open at 90 degrees
- Magnetic gasket can be replaced without any tools
- Adjustable, heavy-duty epoxy coated wire shelves (one per door)
- Stainless steel framework construction
- Auto defrosting and auto evaporation of condensation water
- Added depth allows for extra rows of pans
- 1/6 x 4" PC pans & 9" PE cutting board included

* Unit comes with 4" pans, but can accommodate 6" pans.

- Exterior: 430 stainless steel top, front & sides. Aluminum back panel & galvanized bottom
- Interior: 304 stainless steel floor, ABS sides & door backs. Aluminum back panel
- Temperature: 33 to 41°F / 0.5 to 5°C
- Electrical: 115/60/1 with NEMA 5-15P plug

Warranty: 2-Years Parts & Labor, 5 Years on Compressor

MODEL	DOORS	EXT DIMENSIONS W x D x H	INT. DIMENSIONS W x D x H	AMPS	H.P.	SHIP WEIGHT
EKSP29M	1	28.9 x 34.5 x 43.2	25.6 x 25.6 x 24.5	5	3/8	225 lbs

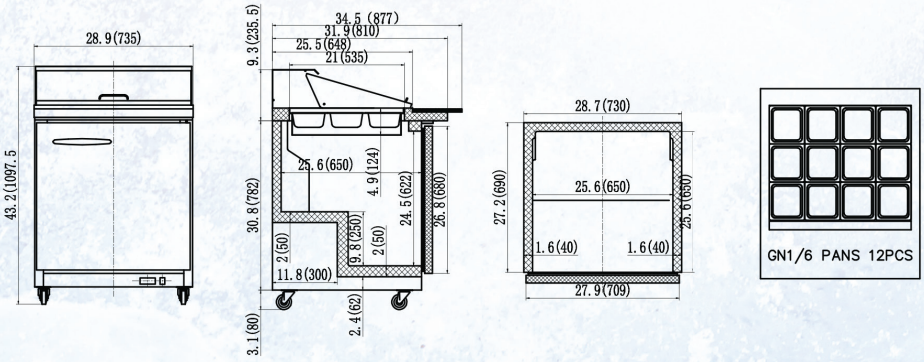

CERTIFIED TO ANSI/ NSF-7 STANDARDS